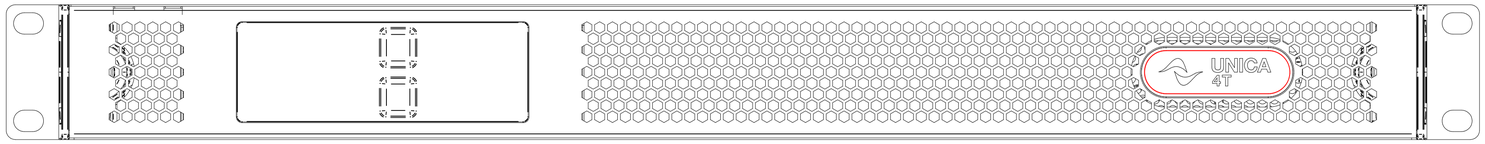
UNICA
4T

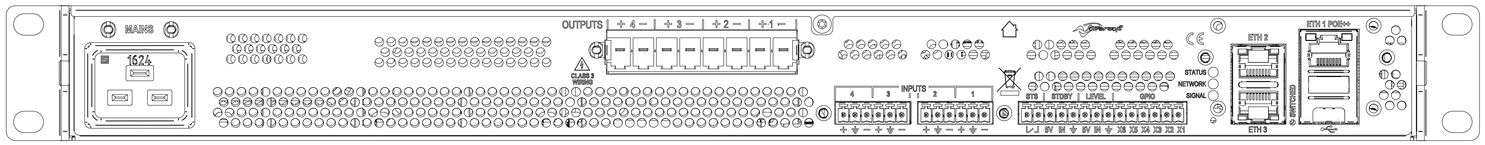
MAINS
1624
OUTPUTS
4
3
2
1
CLASS 2
WIRING
INPUTS
4
3
2
1
STB
STDBY
LEVEL
GPIO
STATUS
NETWORK
SIGNAL
ETH 2
ETH 3
ETH 1 POE

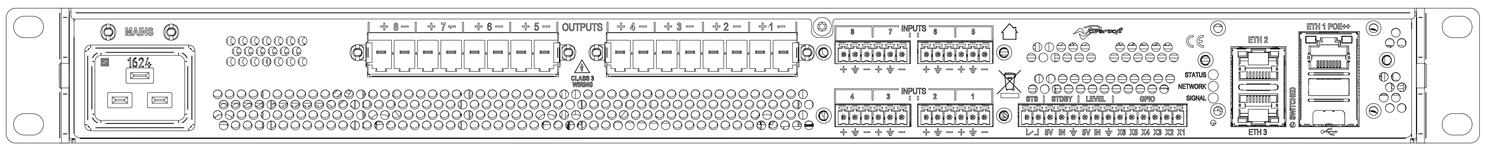
MAINS
1624
8
7
6
5
OUTPUTS
4
3
2
1
CLASS 2
WIRING
INPUTS
8
7
6
5
INPUTS
4
3
2
1
STB
STDBY
LEVEL
GPIO
STATUS
NETWORK
SIGNAL
ETH 2
ETH 3
ETH 1 POE

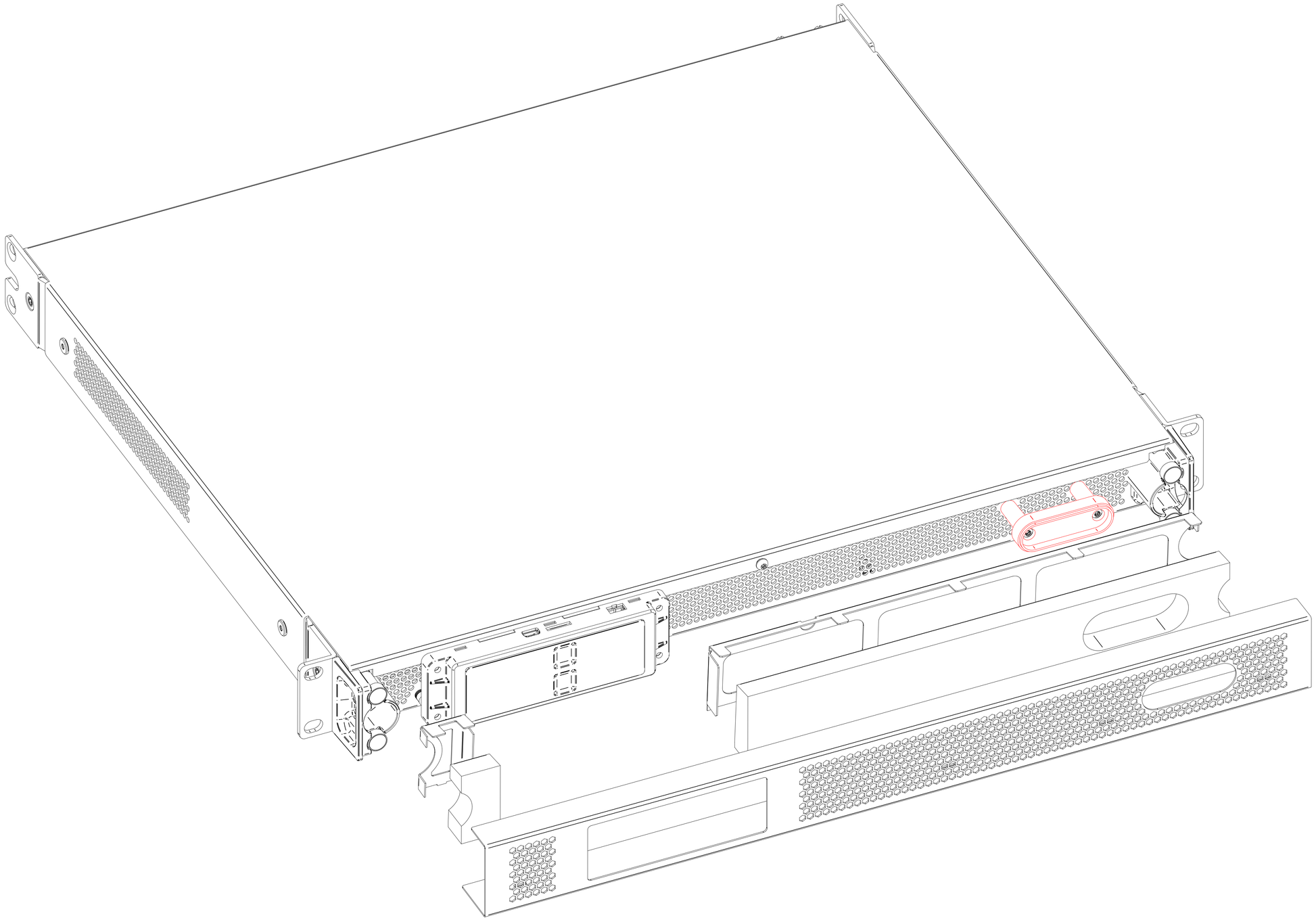

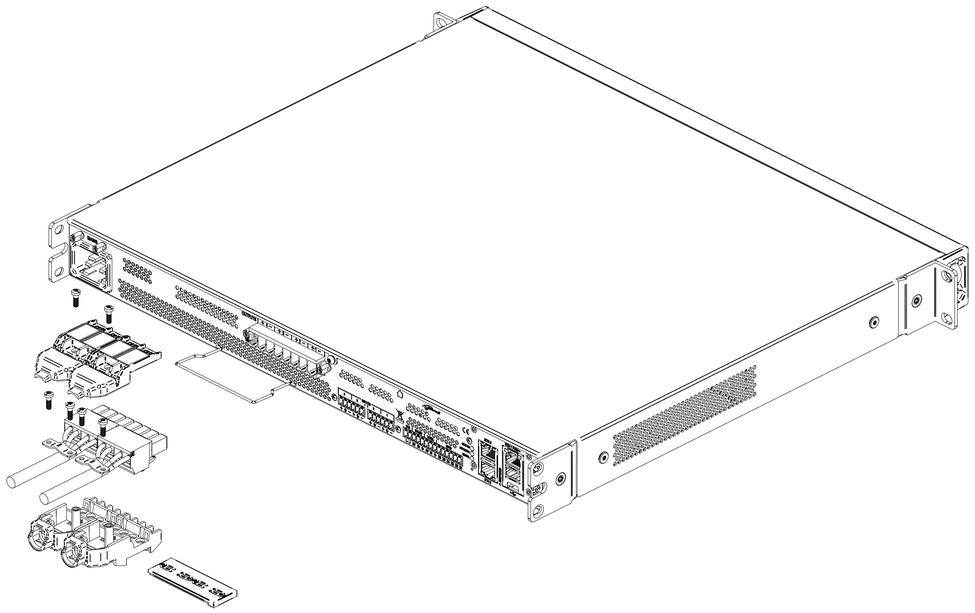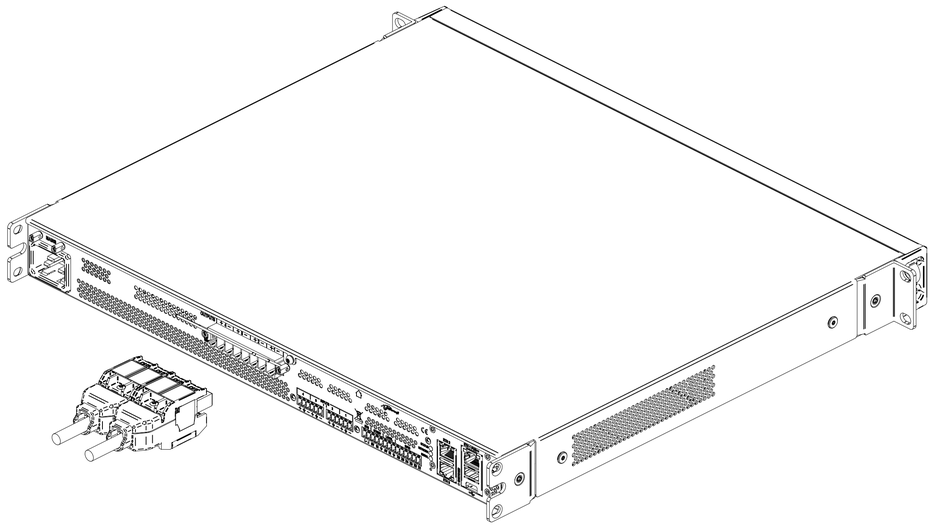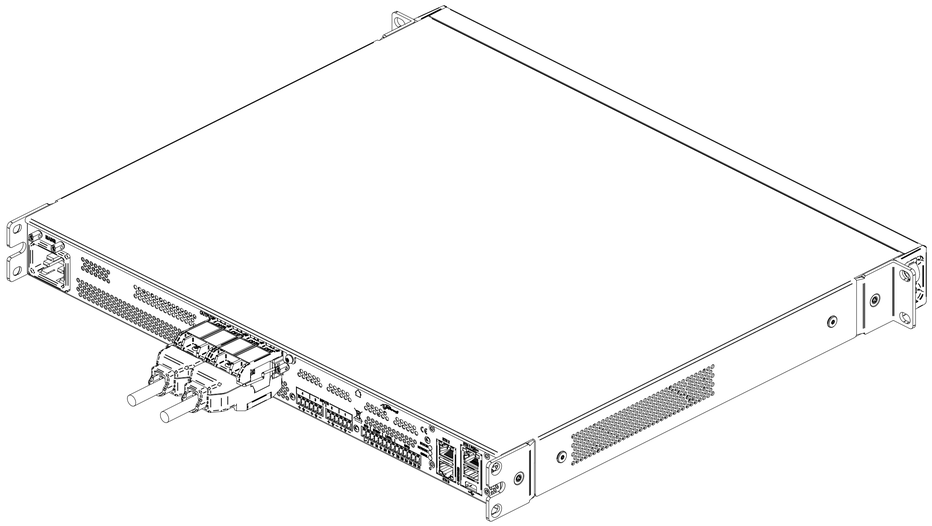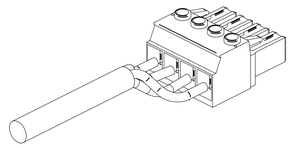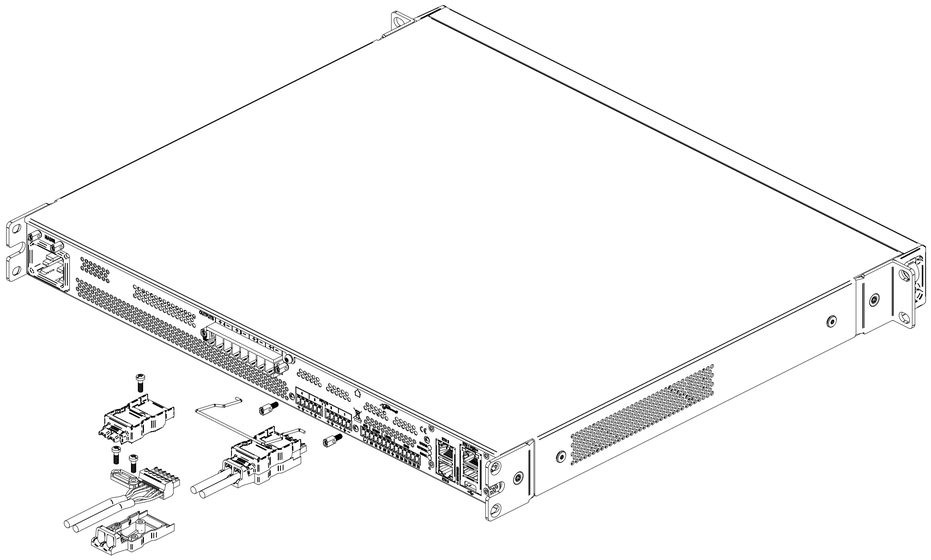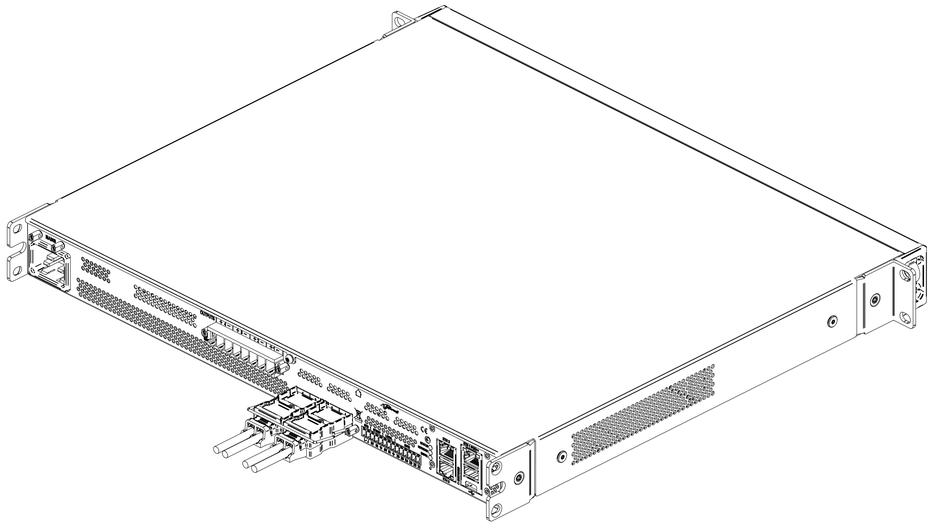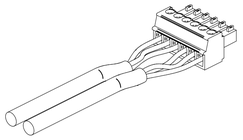
NOTE: 3PHASE - 3PIN